DESIGN SERVICES FOR THE REPLACEMENT OF CIDER BROOK ROAD BRIDGE
REQUEST FOR PROPOSAL 18/19-6 – ADDENDUM ONE (1)

Date: January 4, 2019

This addendum is issued in response to a question and request made by an interested vendor regarding the RFP package.

Q1: In regards to the RFP for Cider Brook Road Bridge Replacement, can you please advise what the funding source is for the design and construction of the bridge? May we please see a copy of the funding application?

Answer: Yes, a copy of the application is attached to this addendum.

Please note that all other terms and conditions appearing in the original Request for Proposal remain unchanged. Vendors are asked to sign, date and return this sheet **along with their Proposal** in order to verify their receipt of this addendum prior to the submission deadline. Please fill out all sections below in order to ensure that your response is considered complete.

Name: _____

Title: _____

Company: _____

Address: _____

_____

City State Zip Code

Telephone: _____

Date: _____

E-mail : _____

CONNECTICUT DEPARTMENT OF TRANSPORTATION

LOCAL BRIDGE PROGRAM

PRELIMINARY APPLICATION

Preliminary application is hereby made by the Town/City/Borough of Avon
for possible inclusion in the Local Bridge Program for Fiscal Year **2017** for the following structure:

Bridge Location: Cider Brook Road over Cider Brook

Bridge Number: 004012 Structure Length: 16.3 feet Curb-to-Curb Width: 17.0 feet

Sufficiency Rating: 22.88 % Priority Rating: %

Evaluation & Rating Performed by: ☐ State Forces ☑ Others

If Others, Name of Professional Engineer: Muhammad Asif Iqbal

Connecticut Professional Engineers License Number: 27653

Engineering Firm: AI Engineers, Inc.

Engineer's Address: 919 Middle Street

Engineer's E-mail Address: miqbal@aiengineers.com

Description of Existing Condition of Structure: *(attach description)*

Description of Project Scope: A *(note Bridge Repair Code as per Figure 5-1 of the FY 2017 Local Bridge Program Manual; attach narrative/preliminary plans & specifications).*

Name of Municipal Official to Contact: Lawrence E. Baril, P.E., GISP

Title: Town Engineer Telephone: (860) 409-4322 Ext: ____ Fax: (860) 409-4364

Mailing Address: 60 West Main Street, Avon, CT 06001-3719

E-mail: lbaril@avonct.gov

Anticipated Schedule:

	(MM/DD/YYYY)
Public Meeting Conducted:	02/27/2019
Design Completion:	08/28/2019
Property Acquisition Completion:	
Utilities Coordination Completion:	08/28/2019
Construction Advertising:	10/30/2019
Supplemental Application Submission: (Not applicable for Federal Local Bridge Program Projects)	12/04/2019
Start of Construction:	03/02/2020
Completion of Construction:	07/31/2020

Local Bridge Program – FY 2017 Preliminary Application

Bridge Number 004012, Town/City/Borough of Avon

Preliminary Cost Figures:

Preliminary Engineering Fees (Include Breakdown of Fees)	$ 115,000.00
Rights-of-Way Cost (If applicable)	$
Municipally Owned Utility Relocation Cost	$
Estimated Construction Costs (Include Detailed Estimate)	$ 350,800.00
Construction Engineering (Inspection, Materials Testing)	$ 52,620.00
Contingencies *(10% of Construction Costs Only)*	$ 35,080.00
Total Estimated Project Cost	$ 553,500.00

Financial Aid Data:

NOTE: funding limited to Eligible Bridges as published at www.ct.gov/dot/localbridge or those found to be eligible in accordance with Section 2.3 – Priority Lists of the FY 2017 Local Bridge Program Manual.

☐ Federal Reimbursement:

Total Estimated Project Cost multiplied by 80%:

Federal Aid Request $ _____

☑ State Local Bridge Project Grant: *(Cannot be combined with Federal reimbursement)*

Municipal Grant Percentage 50.00% of Total Cost *(Appendix 2 of FY 2017 Local Bridge Program Manual)*

Project Grant Request: $ 276,750.00

Other Source of State or Federal funding received/applied for: $ 0.00, State/Federal 0

Funding program: Does Not Apply

I hereby certify that the above is accurate and true, to the best of my knowledge and belief. I also certify that this form has not been modified in any way from that distributed by the Department of Transportation for FY **2017**.

Signature: _____ Date: 8/13/18

Name: Brandon Robertson Title: Town Manager

(Must be signed by Chief Elected Official, Town Manager, or other Officer Duly Authorized)

Return **original signed applications** to:

Mr. Francisco T. Fadul, P.E.
Project Engineer for the Local Bridge Program
Connecticut Department of Transportation
2800 Berlin Turnpike, P.O. Box 317546
Newington, Connecticut 06131-7546

Bridge No. 004012
Cider Brook Road over Cider Brook, Town of Avon

Bridge No 004012 carries Cider Brook Road over Cider Brook in Avon, Connecticut. The single span bridge consists of steel multi-girder beams with a reinforced concrete deck, formed with arched corrugated metal pans, and supported by stone masonry abutments. The bridge was built in 1900 and rehabilitated in 1934. The overall length of the bridge is 16 feet 4 inches, with a curb-to curb width of 17 feet.

Cider Brook Road has recently been paved and the deck of the bridge is in satisfactory condition with a condition rating of 6. The bottom flanges of the steel beams are severely corroded with significant section loss along the full length of the beams. The stone masonry abutment stem walls display missing mortar and deep voids with some undermining at the base. Both the superstructure and the substructure of the bridge are considered to be in poor condition with condition ratings of 4.

The bridge has a sufficiency rating of 22.88 out of a possible 100. There are no components of the bridge worthy of preservation and therefore the Town of Avon proposes to replace the bridge in its entirety. Structure design plans will be developed in accordance with Connecticut Bridge Design Manual, supplemented by AASHTO Bridge Design Guidelines.

The replacement bridge span length will be determine in accordance with the hydraulic requirements of Cider Brook as prescribed in the Connecticut DOT Drainage Manual. Due to the restricted width, Cider Book Road will be closed during construction and traffic will be detoured along Bishop Lane.

Bridge 004012
Cider Brook Road over Cider Brook
Town of Avon

Preliminary Cost Estimate
Replacement of Bridge 004012 With Road way Improvements to Cider Brook Road

Item	Unit	Quantity	Unit Price	Total Cost
Removal of Superstructure	SF	315	$ 70.00	$ 22,050.00
Removal of Existing Masonry	CY	70	$ 120.00	$ 8,400.00
Total Replacement of Bridge to New Standards<1600 SF	SF	315	$ 550.00	$ 173,250.00
Earth Excavation	CY	200	$ 35.00	$ 7,000.00
Formation of Subgrade	SY	200	$ 5.00	$ 1,000.00
Processed Aggregate Base	CY	135	$ 45.00	$ 6,075.00
HMA S1.0	Ton	100	$ 27.00	$ 2,700.00
HMA S0.5	Ton	110	$ 14.00	$ 1,540.00
RB -350 Metal Beam Rail -Bridge Attachments	EA	4	$ 2,500.00	$ 10,000.00
RB -350 End Block Anchors-Type II	EA	4	$ 1,600.00	$ 6,400.00
RB-350 Metal Beam Rail	LF	100	$ 30.00	$ 3,000.00
Construction Field Office (Small)	MO	5	$ 3,000.00	$ 15,000.00
			Subtotal A	$ 256,415.00
Lump Sum Items				
Clearing & Grubbing (2% of Subtotal A)				$ 5,128.30
M & P of Traffic (4.5% of Subtotal A)				$ 11,538.68
Mobilization & Project Closeout (6.5% of Subtotal A)				$ 16,666.98
Construction Staking (1% of Subtotal A)				$ 2,564.15
			Subtotal B	$ 292,313.10
Minor Items 20% of Subtotal A				$ 58,462.62
Construction Cost			Subtotal C	**$ 350,775.72**
Contingency (10% of Subtotal C)				$ 35,077.57
Incidentals (CEI, Materials Testing 15% of Subtotal C)				$ 52,616.36
			Subtotal D	**$ 438,469.65**
			Total A	**$ 438,500.00**
Preliminary Engineering				
Survey				$ 10,000.00
Hydrology & Hydraulics				$ 10,000.00
Geotechnical & Soil Exploration				$ 10,000.00
Design Fee				$ 60,000.00
Shop drawings & DSDC				$ 25,000.00
Total Fee			**Total B**	**$ 115,000.00**
Total Estimated Project Cost (Total A + Total B)				**$ 553,500.00**

TOWN OF AVON

DEPARTMENT OF ENGINEERING

ROUTINE INSPECTION REPORT FOR BRIDGE NO. 004012

CIDER BROOK ROAD
OVER
CIDER BROOK
AVON, CONNECTICUT

STEEL MULTI-GIRDER

INSPECTED JULY 05, 2018

Prepared by:

AI Engineers, Inc.

919 Middle Street
Middletown, CT 06457

STATE OF CONNECTICUT
MUHAMMAD ASIF IQBAL
27653
LICENSED PROFESSIONAL ENGINEER
7/13/2018

Prepared for:
Town of Avon
Department of Engineering
60 West Main Street
Avon, CT
06001

AVON
CONNECTICUT

AI Engineers, Inc.

LOCATION MAP

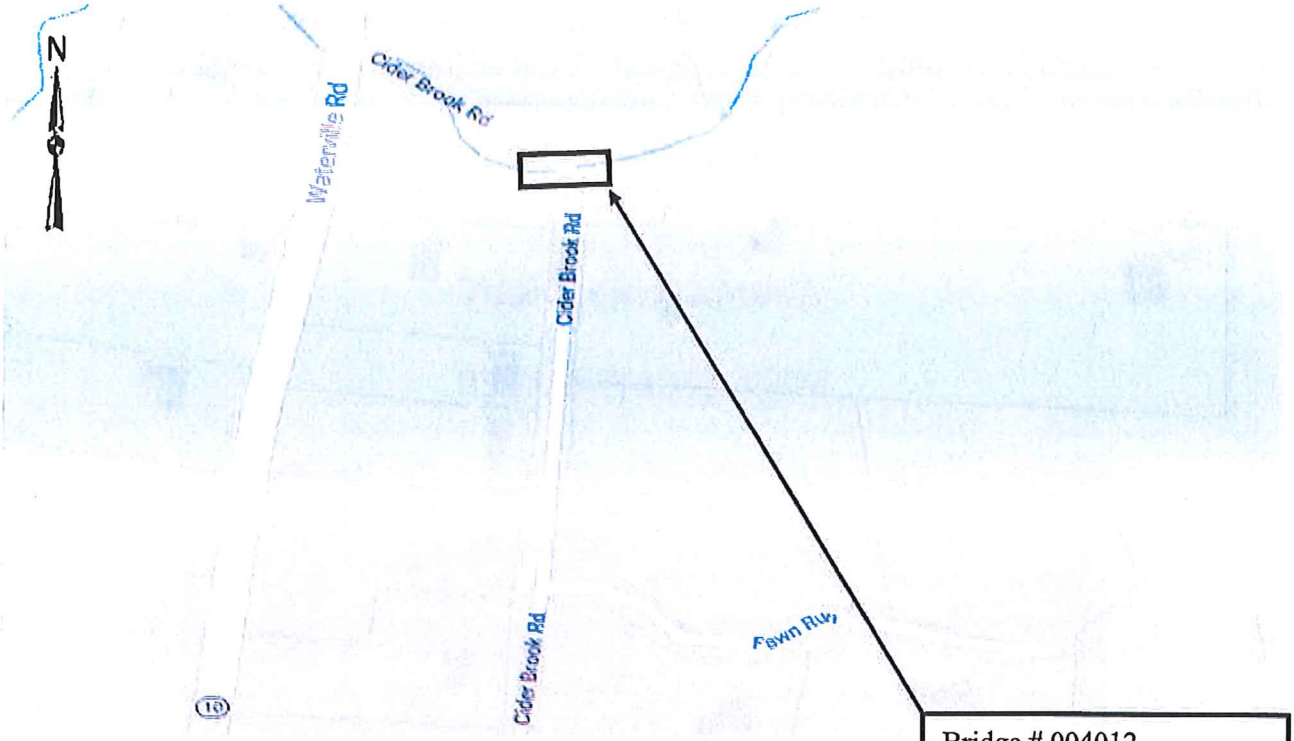

Bridge # 004012
Carrying Cider Brook Rd.
Over Cider Brook
Avon, CT

AERIAL VIEW

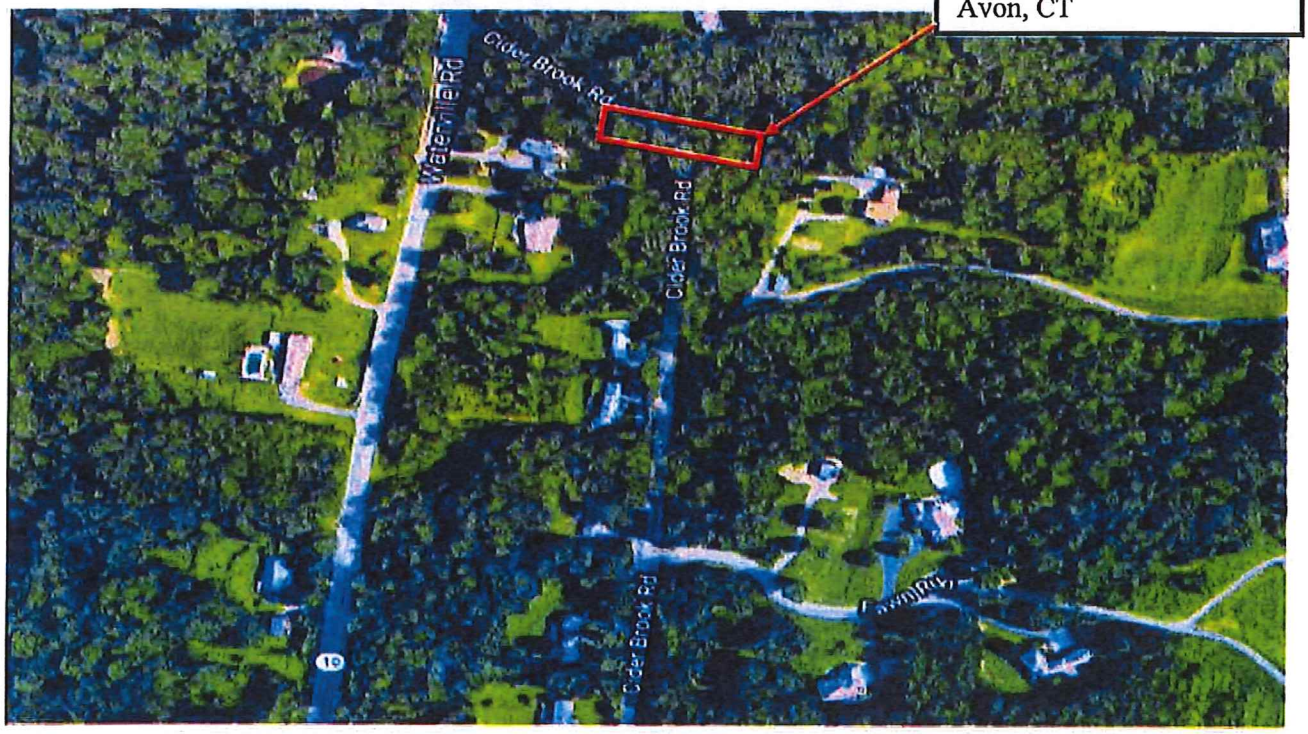

DEPARTMENT OF TRANSPORTATION
BUREAU OF HIGHWAYS

FORM BRI-27

Structure No. **004012**

Town Avon

Inspectors: HE, CP (AI Engineers, Inc.)

Date 7/5/2018

TABLE OF CONTENTS

Loose Forms (not bound in report)	No. of Sheets Enclosed
Maintenance Memo	0
Flagging Memos	0
Plan Sheets Year 1991 Check here if already on file ☑	1
Bound Report Pages	
Title Cover Sheet	1
Location Map	1
Table of Contents	1
Executive Summary	2
BRI-11, Seismic Screening Data Sheet	0
BRI-12, Fracture Critical Inspection Data Sheet	0
BRI-19, Hwy Bridge SI&A Form	0
BRI-25, Under Entry SI&A Form	0
PONTIS Element Data Collection Form	0
BRI-18, Bridge Inspection Form	8
BRI-20, Bridge Inspection Form	0
Field Notes (Include Forms ~~BRI-10, BRI-13, BRI-14, BRI-15, BRI-16, BRI-17, BRI-29, BRI-30~~)	7
Calculations:	
Load Rating Evaluation	0
Quantities & Cost Estimate	1
Photo Sheets	11
Photos	22
Back up material	1

EXECUTIVE SUMMARY
07-05-2018

Bridge No. 004012 carries Cider Brook Road over Cider Brook in Avon, Connecticut. The single span bridge consists steel multi-girder with a reinforced concrete deck (covered with corrugated metal forms) and supported by stone masonry abutments. The bridge was originally built in 1900 and rehabilitated in 1934. The overall length of the bridge is 16 feet 4 inches, with curb-to-curb width of 17 feet.

A routine inspection completed by AI Engineers, Inc., on July 05, 2018 found the bridge to be in poor condition (Rating = 4). The deficiencies found on the bridge are as follows:

Deck:

The deck is in satisfactory condition. (Rating = 6).

- The bituminous concrete overlay exhibits minor areas of hairline map cracking.
- The underside of concrete deck is obscured from view due to the presence of corrugated metal forms. The corrugated metal forms have areas of laminated rust with section loss and rusted through holes mostly at the ends near the girder bottom flanges.
- Metal railing on each side of the bridge exhibits light rust. The bottom angles at the southeast, southwest and the northeast corners are broken.

Superstructure:

The superstructure is in poor condition. (Rating = 4).

- Girder webs and top flanges were hidden due to corrugated metal forms on the deck underside. The exposed bottom flanges are severely rusted, some with significant section loss as follows:

  - Girder G1 has full length x full width laminated rust with up to 3/16" deep section loss.
  - Girder G3 has 5' long x full width laminated rust with up to ¼' section loss at abutment 2.
  - Girder G4 has full length x full width x 1/16" deep pitting loss.
  - Girder G5 has a 3' long x 3" wide laminated rust with 3/16" deep section loss at the east leg of the bottom flange at abutment 2.
  - Girder G6 has a 1' long x 1" wide x 100% section loss, located approximately 4' from abutment 1 resulting in 80% section loss (worst case). The remaining length of the bottom flange has full width laminated rust with 4/16" – 5/16" deep section loss.
  - Girder G7 has a 25'' long x 1" wide x 100% section loss, located approximately 3' from abutment 1 resulting in 80% section loss (Worst case). The remaining length of the bottom flange has full width laminated rust with 4/16" – 5/16" deep section loss.

Substructure:

The substructure is in poor condition. (Rating = 4).

- The stone masonry abutment stems with partial concrete façade have missing mortar up to 25 % and up to 4' x 2' x 2' deep voids/undermining at the bottom of the stems.

- The stone masonry wingwalls 1A, 1B & 2A with partial concrete façade have missing mortar up to 100% and voids up to 2' x 1' x 2' deep.
- Wingwall 1A has 2' diameter area of loose/missing stones at the top left corner.
- There is big tree along wingwall 2A.

Channel & Channel Protection:

The channel and channel protection are in poor condition. (Rating = 4).

- There is undermining under both abutment stems which is caused by scour in the channel along the stems.
- The northwest embankment has 5' x 1' x 1' deep eroded area with exposed tree roots near wingwall 2A. Downstream flow drops-off and bends to the north causing erosion along the outside embankment.

Approaches:

The approaches are in fair condition. (Rating = 5). Rating is based on the condition of the approach guide rails.

- There are wooden posts with missing 2-cable guide rail at the northwest corner. There are no guide rails at all other approach corners. A concrete end block is present at the northeast corner and the lack of the guide rail makes this a blunt end.

Town of Greenwich

Bridge Inspection Report BRI-18

Bridge #: 004012

Inspection Date: 07/05/2018

Inspection Type:	Routine	**Previous Screening Inspection Date:**	2/17/2017	**Snooper Required:**	No
Inspection Performed By:	Al Engineers	**Feature Carried:**	Cider Brook Road	**Snooper Used:**	No
Town:	Avon	**Feature Intersected:**	Cider Brook	**Year Built:**	1900
Location:	0.1 mi E. Jct. SR 10	**Main Design:**	Stringer/Multi-beam or Girder	**Year Rebuilt:**	1934
Main Material:	Steel				

Visits

Visit Date:	Temp:	Start Time:	End Time:
7/05/2018	85	08:30:00 AM	12:30:00 PM

Inspectors:

Inspector:	Task:
H. Elmakky	Lead Inspector
C. Pruzinsky	Inspector

DECK: Reinforced concrete deck with bituminous concrete overlay.

The deck is in satisfactory condition.

Overall Rating: 6

	Rating	
OVERLAY:	7	The bituminous concrete overlay exhibits minor areas of hairline map cracking. See photo 5.
DECK-STR. CONDITION:	6	The underside of concrete deck is obscured from view due to the presence of corrugated metal forms. The corrugated metal forms have areas of laminated rust with section loss and rusted through holes mostly at the ends near the girder bottom flanges. See photo 6.
CURBS:	N	
MEDIAN:	N	
SIDEWALKS:	N	
PARAPET:	N	

RAILING:	6	Metal railing on each side of the bridge exhibits light rust. The bottom angles at the southeast, southwest and the northeast corners are broken. See photo 7.
PAINT:	N	
FENCE:	N	
DRAINS:	N	
LIGHTING STANDARD:	N	
UTILITIES TYPE/SIZE:	N	-
CONSTR JOINTS:	N	-
EXPANSION JOINTS:	N	.

59. SUPERSTRUCTURE:	Steel multi-girder. The superstructure is in poor condition.	**Overall Rating:**	4

	Rating	
BEARING DEVICES:	N	
STRINGERS:	N	

GIRDERS:	4	- Girder webs and top flanges were hidden due to corrugated metal forms on the deck underside. - The exposed bottom flanges are severely rusted, some with significant section loss as follows: - Girder G1 has full length x full width laminated rust with up to 3/16" deep section loss. See photo 10. - Girder G3 has 5' long x full width laminated rust with up to ¼' section loss at abutment 2. See photos 11 & 12. - Girder G4 has full length x full width x 1/16" deep pitting loss. - Girder G5 has a 3' long x 3" wide laminated rust with 3/16" deep section loss at the east leg of the bottom flange at abutment 2. - Girder G6 has a 1' long x 1" wide x 100% section loss, located approximately 4' from abutment 1 resulting in 80% section loss (worst case). The remaining length of the bottom flange has full width laminated rust with 4/16" – 5/16" deep section loss. See photos 13 and 14. - Girder G7 has a 25" long x 1" wide x 100% section loss, located approximately 3' from abutment 1 resulting in 80% section loss (Worst case). The remaining length of the bottom flange has full width laminated rust with 4/16" – 5/16" deep section loss. See Photo 15. See photo 6.
FLOOR BEAMS:	N	
TRUSSES-GENERAL:	N	
TRUSSES-PORTALS:	N	
TRUSSES-BRACING:	N	
PAINT:	3	- Approximately 85% peeling paint with moderate to heavy rust.
RUST:	4	See above items.
MACHINERY MOV SPAN:	N	
RIVETS & BOLTS:	N	
WELDS - CRACKS:	N	Not visible due to corrugated metal forms.
TIMBER DECAY:	N	-
CONCRETE CRACKING:	N	-

COLLISION DAMAGE:	8	
MEMBER ALIGNMENT:	8	
DEFLECT. UNDER LOAD:	N	(N) Normal; (E) Excessive
VIBRATION UNDER LOAD:	N	(N) Normal; (E) Excessive
STAND PIPES:	N	-
BARREL LADDERS:	N	-

ARE BARREL LADDERS OSHA COMPLIANT? NA

---

60. SUBSTRUCTURE: Stone masonry abutments and wingwalls.

The substructure is in poor condition.

Overall Rating: 4

	Rating	
ABUTMENTS-STEM:	4	The stone masonry abutment stems with partial concrete façade have missing mortar up to 25 % and up to 4' x 2' x 2' deep voids/undermining at the bottom of the stems. See photos 16 & 17.
ABUTMENTS-BACKWALL:	N	Not visible.
ABUTMENTS-FOOTINGS:	N	Not visible. Portion of the abutment stems is founded on ledge.
ABUTMENTS-SETTLEMENT:	8	None noted.
ABUTMENTS-WINGWALLS:	4	The stone masonry wingwalls 1A, 1B & 2A with partial concrete façade have missing mortar up to 100% and voids up to 2' x 1' x 2' deep. See photos 18 and 19. Wingwall 1A has 2' diameter area of loose/missing stones at the top left corner. See photo 20. There is big tree along wingwall 2A. See photo 19.
PIERS/BENTS-CAPS:	N	
PIERS/BENTS-PILE BENT:	N	

PIERS/BENTS-COLUMNS:	N	
PIERS/BENTS-FOOTING:	N	-
PIERS/BENTS-SETTLMT:	N	-
EROSION-SCOUR:	4	Erosion Rated: 5 The northwest embankment has 5' x 1' x 1' deep eroded area with exposed tree roots near wingwall 2A. See photo 19. See "Abutment Stem" item above. Scour Rated: 4 See "Abutment Stem" item above.
CONCRETE CRACK-SPALL:	N	
STEEL CORROSION:	N	-
PAINT:	N	-
TIMBER DECAY:	N	-
COLLISION DAMAGE:	8	-
DEBRIS:	8	

61. CHANNEL & CHANNEL PROTECTION:	The channel bottom consists of cobble-stones up to 1.5' diameter. The channel and channel protection are in poor condition.	**Overall Rating:**	4

	Rating	
CHANNEL SCOUR:	4	There is undermining under both abutment stems which is caused by scour in the channel along the stems. See photos 16 and 17. No scour activity noted at the upstream or downstream of channel. See photos 21 and 22.
EMBANKMENT EROSION:	5	The northwest embankment has 5' x 1' x 1' deep eroded area with exposed tree roots near wingwall 2A. Downstream flow drops-off and bends to the north causing erosion along the outside embankment. See photos 19, 21 and 22.
DEBRIS:	7	Minor debris (tree branches and shrubs) in the channel.
VEGETATION:	7	Heavy vegetation along the embankments with overhanging and fallen branches in channel. See photos 21 and 22.
CHANNEL CHANGE:	4	Downstream flow drops-off and bends to the north with erosion on outside embankment. See photo 22. Also, see item "Channel Scour" above.
FENDER SYSTEM:	N	
SPUR, DIKES & JETTIES:	N	
RIP RAP:	N	

62. CULVERTS & RETAINING WALL:		Overall Rating:	N

	Rating	
BARREL:	N	
CONCRETE:	N	
STEEL:	N	
TIMBER:	N	
HEADWALL:	N	
CUTOFF WALL:	N	
DEBRIS:	N	
RETAINING WALL STEM:	N	
FOOTING:	N	

65. APPROACH CONDITION	Bituminous approach pavement. The approaches are in fair condition. Rating is based on the condition of the approach guide rails.	Overall Rating:	5

	Rating	
APPROACH SLAB:	N	
RELIEF JOINTS:	N	
APPROACH GUIDE RAIL:	5	There are wooden posts with missing 2-cable guide rail at the northwest corner. See photo 8. There are no guide rails at all other approach corners. A concrete end block is present at the northeast corner and the lack of the guide rail makes this a blunt end. See photo 3.
APPROACH PAVEMENT:	8	No deficiencies noted. See photo 9.
APPROACH EMBANKMENT:	8	

TRAFFIC SAFETY FEATURES

	Rating	
BRIDGE RAILINGS:	Last Inspection: 0 Current: 0	Bridge rails do not meet standards.

TRANSITIONS:	Last Inspection: 0 Current: 0	No Guardrails.
APPROACH GUARDRAILS:	Last Inspection: 0 Current: 0	No Guardrails.
APPR. GUARDRAIL ENDS:	Last Inspection: 0 Current: 0	No Guardrails.

66. LOAD POSTING

- Posted Loading -

SINGLE UNIT (TONS):	Last Inspection: - Current: -	-
SEMI TRAILER (TONS):	Last Inspection: - Current: -	-
4 AXLE (TONS):	Last Inspection: - Current: -	-
3S2 (TONS):	Last Inspection: - Current: -	-
ADVANCE WARNING(Y/N):	N	-
LEGIBILITY:	N	-
VISIBILITY/ LOCATION:	N	-

67. MISCELLANEOUS

Rating

MIN. VERT. UNDERCLEARANCE:	Last Inspection: -' -" Current: -' -"	-
POSTED CLR. UNDER BRIDGE:	Last Inspection: -' -" Current: -' -"	-
POSTED CLR. ON BRIDGE:	Last Inspection: -' -" Current: -' -"	-
ADVANCED WARNING (YES/NO):	No	-
SPEED LIMIT (IF ANY):	Last Inspection: - Current: -	-
CHARACTER OF TRAFIC:		

ADDITIONAL NOTES:		- The bridge is logged from south to north with Girder G1 at the west fascia. Cider Brook flows east to west. - Bridge was inspected using waders and ladder.
ADDITIONAL COMMENTS:		See report table of contents.

Inspectors' Signatures:

1) _____ **Date:** 7/13/2018

2) _____ **Date:** 7/13/2018

3) _____ **Date:** ----/----/--------

4) _____ **Date:** ----/----/--------

P.E. Signature: _____ **Date:** 7/13/2018

P.E. #: 27653 **Date:** 7/13/2018

CREW: HE, CP (AI)	DATE: 7/05/2018	BRIDGE NO.: 004012

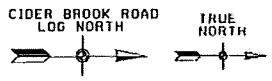

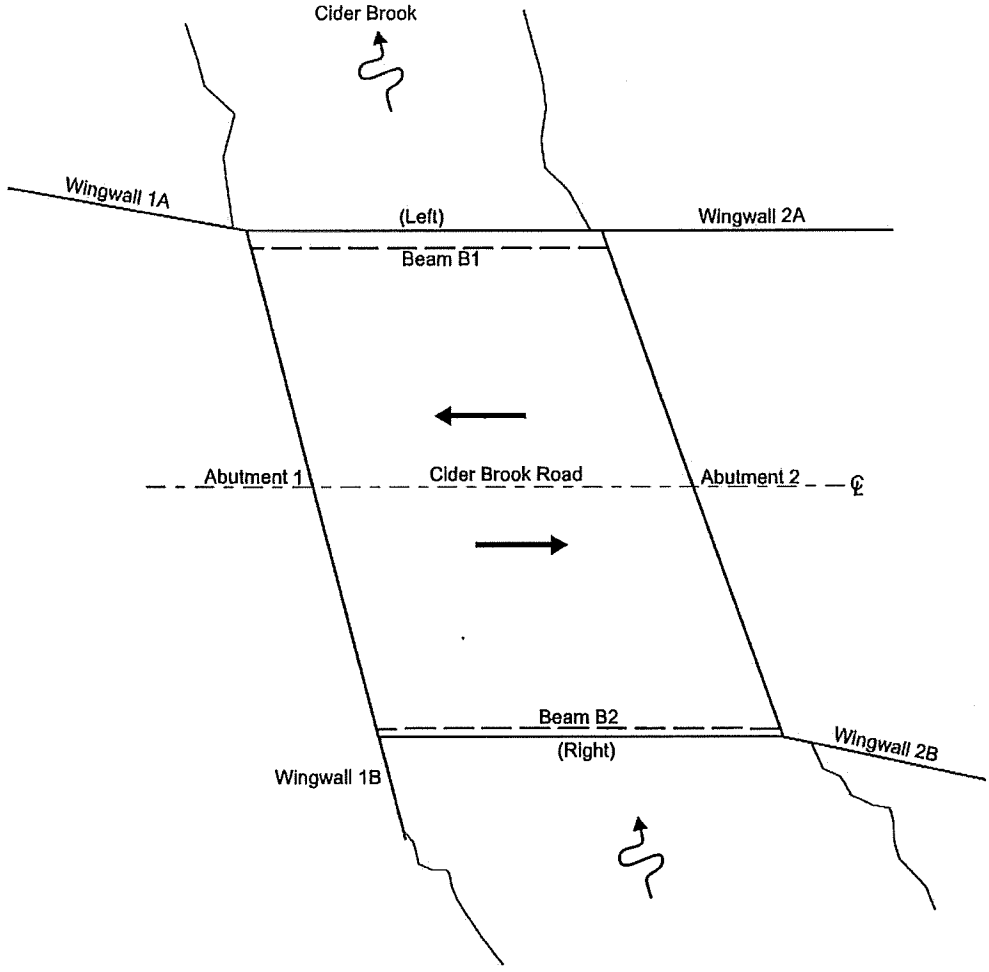

LEGEND:
- HOLLOW AREA
- SHALLOW REBAR
- SPALL AREA
- SPALL AREA WITH EXPOSED REBAR
- MAPCRACKS
- HAIRLINE CRACKS
- HONEYCOMB AREA
- SCALE AREA
- EFFLORESCENCE PRESENT

KEY PLAN

REVISION 1	DATE:	CREW:	REVISION 3	DATE:	CREW:
REVISION 2	DATE:	CREW:	REVISION 4	DATE:	CREW:

CREW: HE, CP (AI)	DATE: 7/05/2018	BRIDGE NO.: 004012

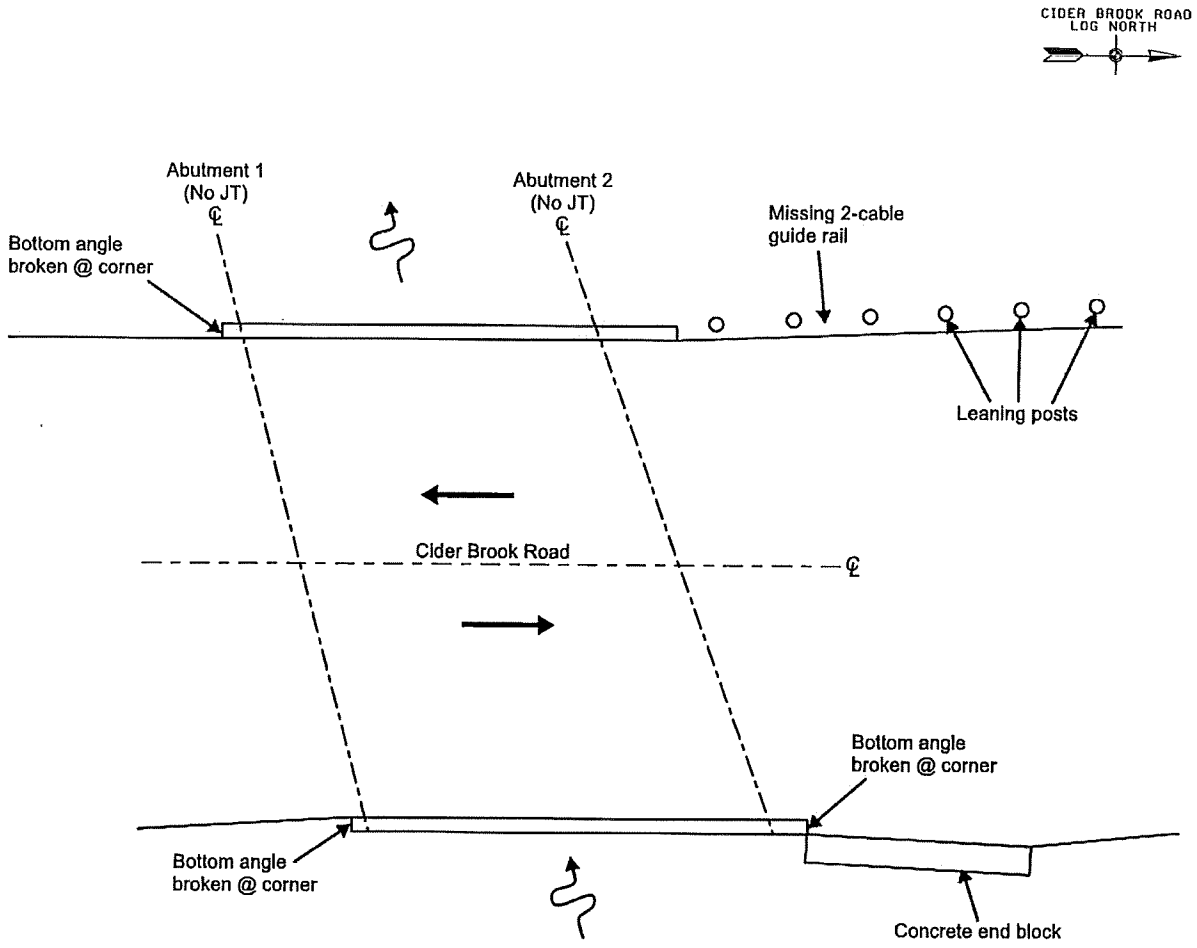

General Notes:
- Bridge metal railing on both sides of bridge exhibits light rust.
- Bituminous overlay exhibits minor areas of hairline map cracking.

LEGEND:
- HOLLOW AREA
- SHALLOW REBAR
- SPALL AREA
- SPALL AREA WITH EXPOSED REBAR
- MAPCRACKS
- HAIRLINE CRACKS
- HONEYCOMB AREA
- SCALE AREA
- EFFLORESCENCE PRESENT

TOP OF DECK

REVISION 1	DATE:	CREW:	REVISION 3	DATE:	CREW:
REVISION 2	DATE:	CREW:	REVISION 4	DATE:	CREW:

CREW: HE, CP (AI)	DATE: 7/05/2018	BRIDGE NO.: 004012

CIDER BROOK ROAD
LOG NORTH

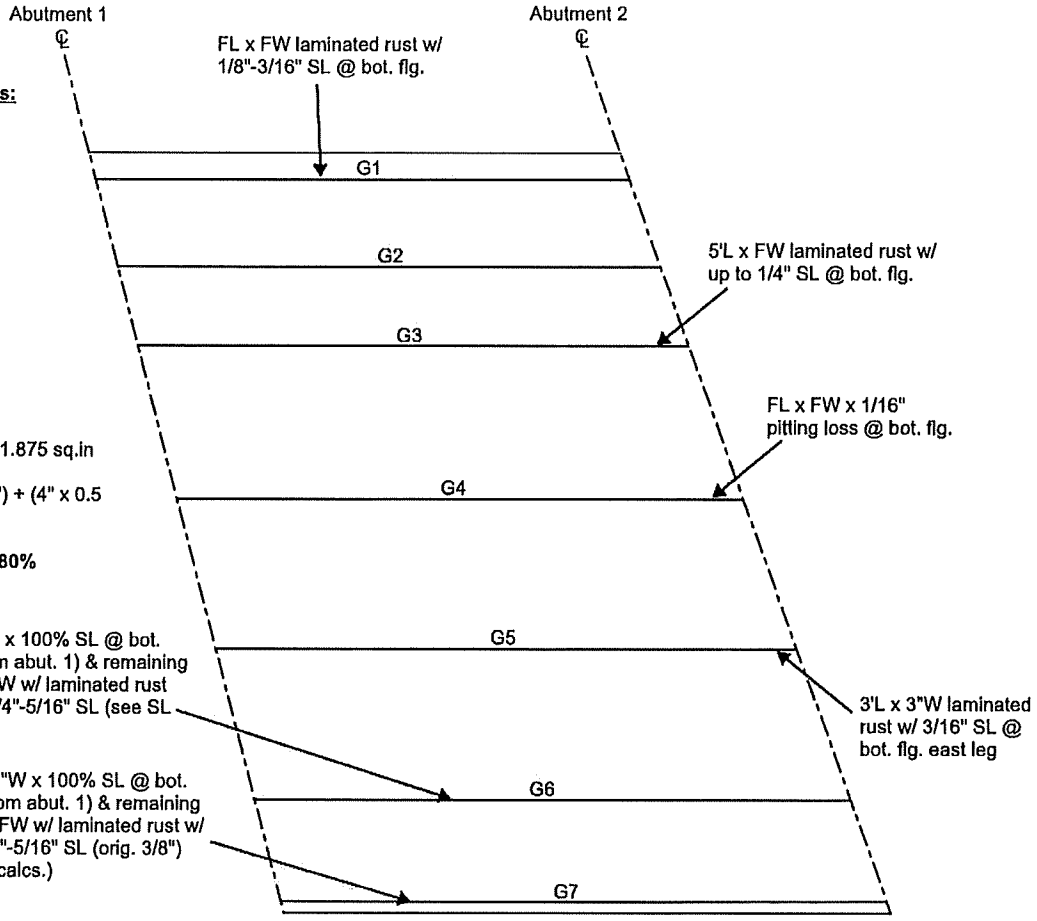

Bot. Flange SL Calculations:
(Girders G6 & G7)

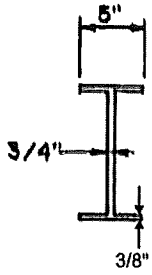

BF original area = 5" x 3/8" = 1.875 sq.in

BF sec. loss area = (1" x 3/8") + (4" x 0.5 (1/4"+ 5/16")) = 1.5 sq.in

Section loss % = 1.5/1.875 = **80%**

General Notes:
- Underside of concrete deck, girder webs and top flanges were hidden from view due to corrugated plates/sheets.
- Approximately 85% peeling paint with moderate to heavy rust on girder bottom flanges.

LEGEND:
- HOLLOW AREA
- SHALLOW REBAR
- SPALL AREA
- SPALL AREA WITH EXPOSED REBAR
- MAPCRACKS
- HAIRLINE CRACKS
- HONEYCOMB AREA
- SCALE AREA
- EFFLORESCENCE PRESENT

UNDERSIDE OF DECK & FRAMING

REVISION 1	DATE:	CREW:	REVISION 3	DATE:	CREW:
REVISION 2	DATE:	CREW:	REVISION 4	DATE:	CREW:

CREW: HE, CP (AI)	DATE: 7/05/2018	BRIDGE NO.: 004012

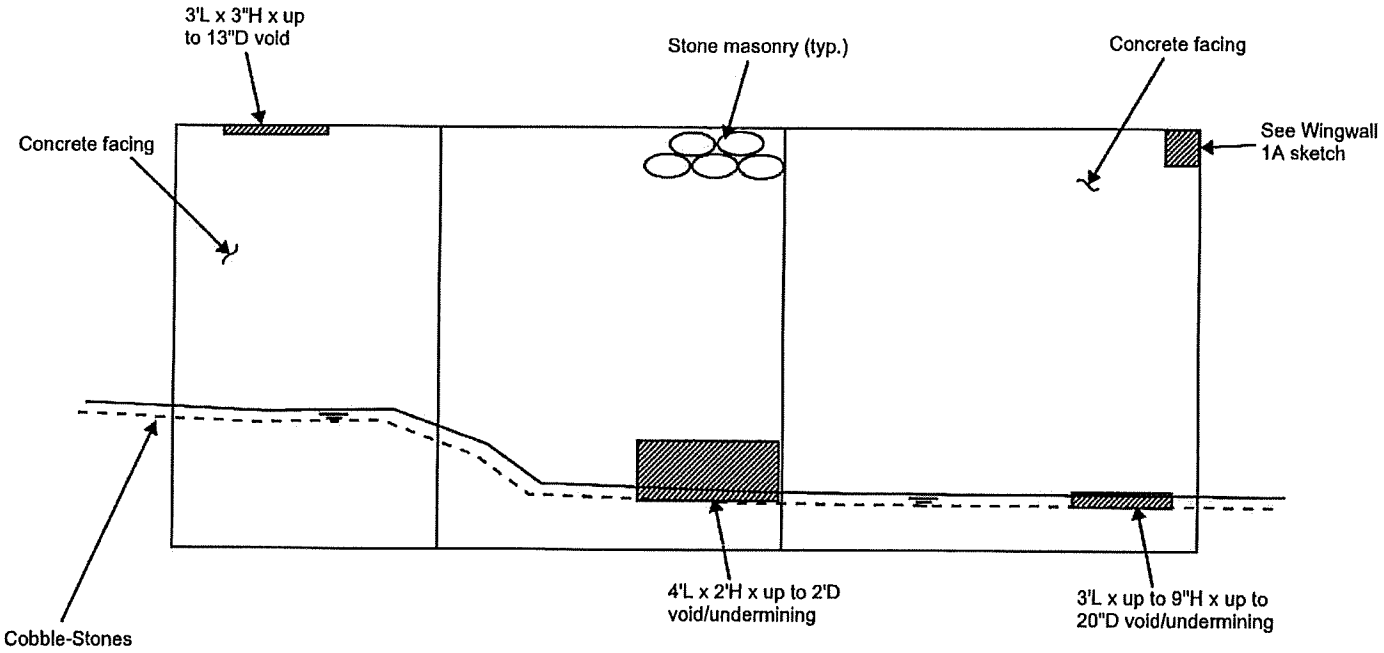

General Notes:
- There is exposed masonry stones at the bottom of concrete facing.
- Channel bottom consists of cobble-stones up to 1.5' diameter.

LEGEND:
- HOLLOW AREA
- SHALLOW REBAR
- SPALL AREA
- SPALL AREA WITH EXPOSED REBAR
- MAPCRACKS
- HAIRLINE CRACKS
- HONEYCOMB AREA
- SCALE AREA
- EFFLORESCENCE PRESENT

ABUTMENT 1

REVISION 1	DATE:	CREW:	REVISION 3	DATE:	CREW:
REVISION 2	DATE:	CREW:	REVISION 4	DATE:	CREW:

CREW: HE, CP (AI)	DATE: 7/05/2018	BRIDGE NO.: 004012

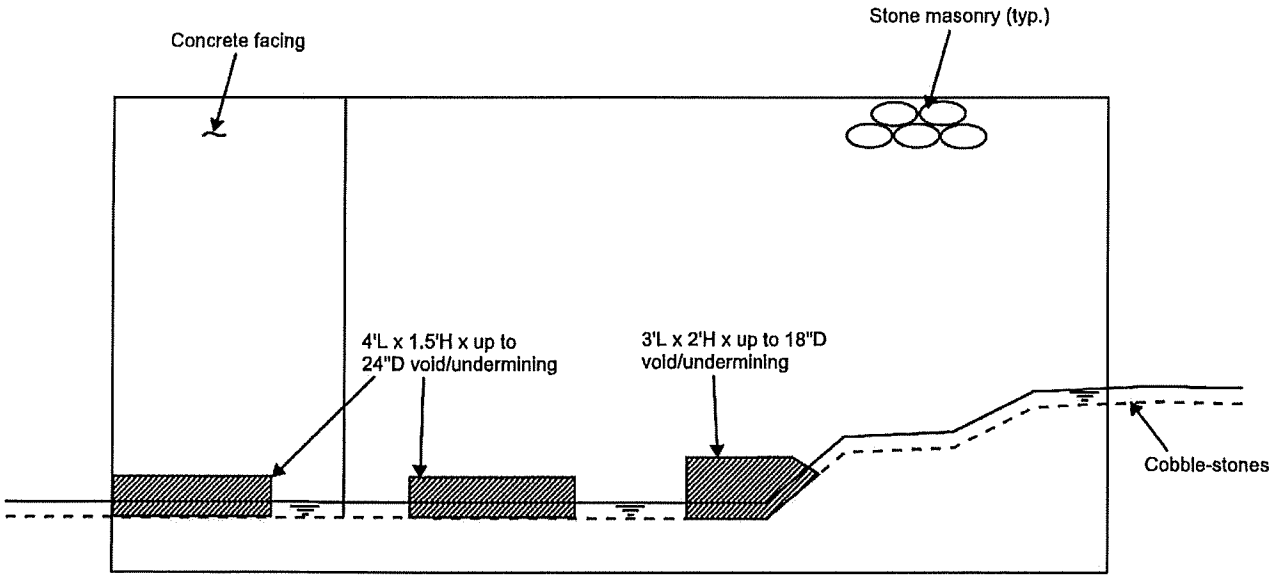

General Notes:
- There is exposed masonry stones at the bottom of concrete facing.

LEGEND:
- HOLLOW AREA
- SHALLOW REBAR
- SPALL AREA
- SPALL AREA WITH EXPOSED REBAR
- MAPCRACKS
- HAIRLINE CRACKS
- HONEYCOMB AREA
- SCALE AREA
- EFFLORESCENCE PRESENT

ABUTMENT 2

REVISION 1	DATE:	CREW:	REVISION 3	DATE:	CREW:
REVISION 2	DATE:	CREW:	REVISION 4	DATE:	CREW:

CREW: HE, CP (AI)	DATE: 7/05/2018	BRIDGE NO.: 004012

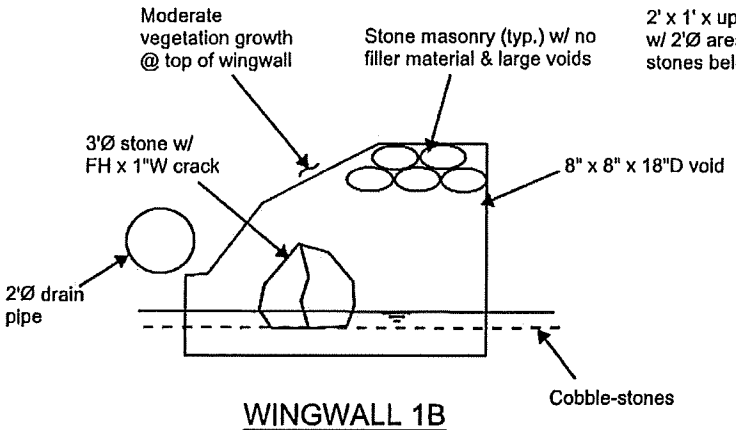

WINGWALL 1B

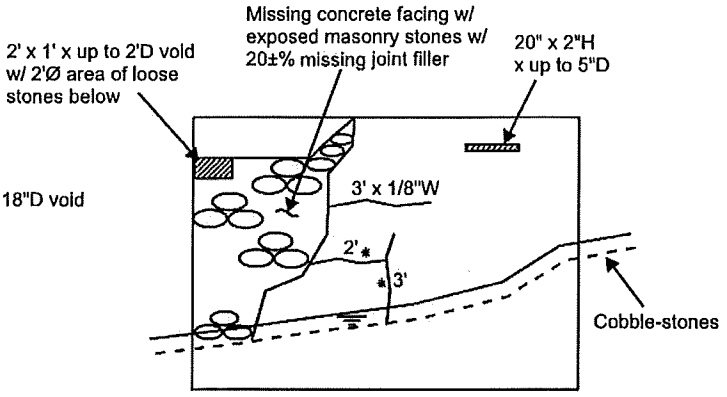

WINGWALL 1A

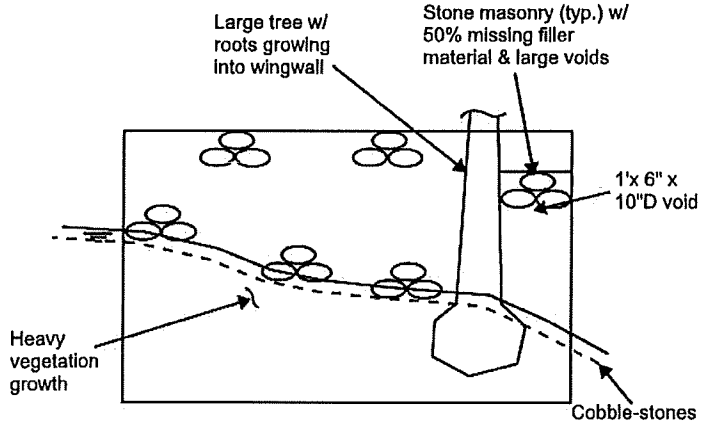

WINGWALL 2A

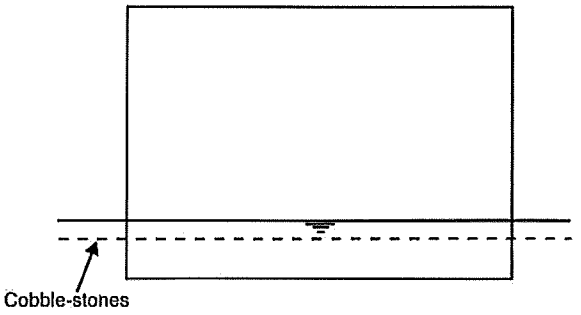

WINGWALL 2B

LEGEND:
- HOLLOW AREA
- SHALLOW REBAR
- SPALL AREA
- SPALL AREA WITH EXPOSED REBAR
- MAPCRACKS
- HAIRLINE CRACKS
- HONEYCOMB AREA
- SCALE AREA
- EFFLORESCENCE PRESENT

General Notes:
- Light scale along top of Wingwalls 1A & 2A.

REVISION 1	DATE:	CREW:	REVISION 3	DATE:	CREW:
REVISION 2	DATE:	CREW:	REVISION 4	DATE:	CREW:

CREW: HE, CP (AI)	DATE: 7/05/2018	BRIDGE NO.: 004012

CIDER BROOK ROAD
LOG NORTH

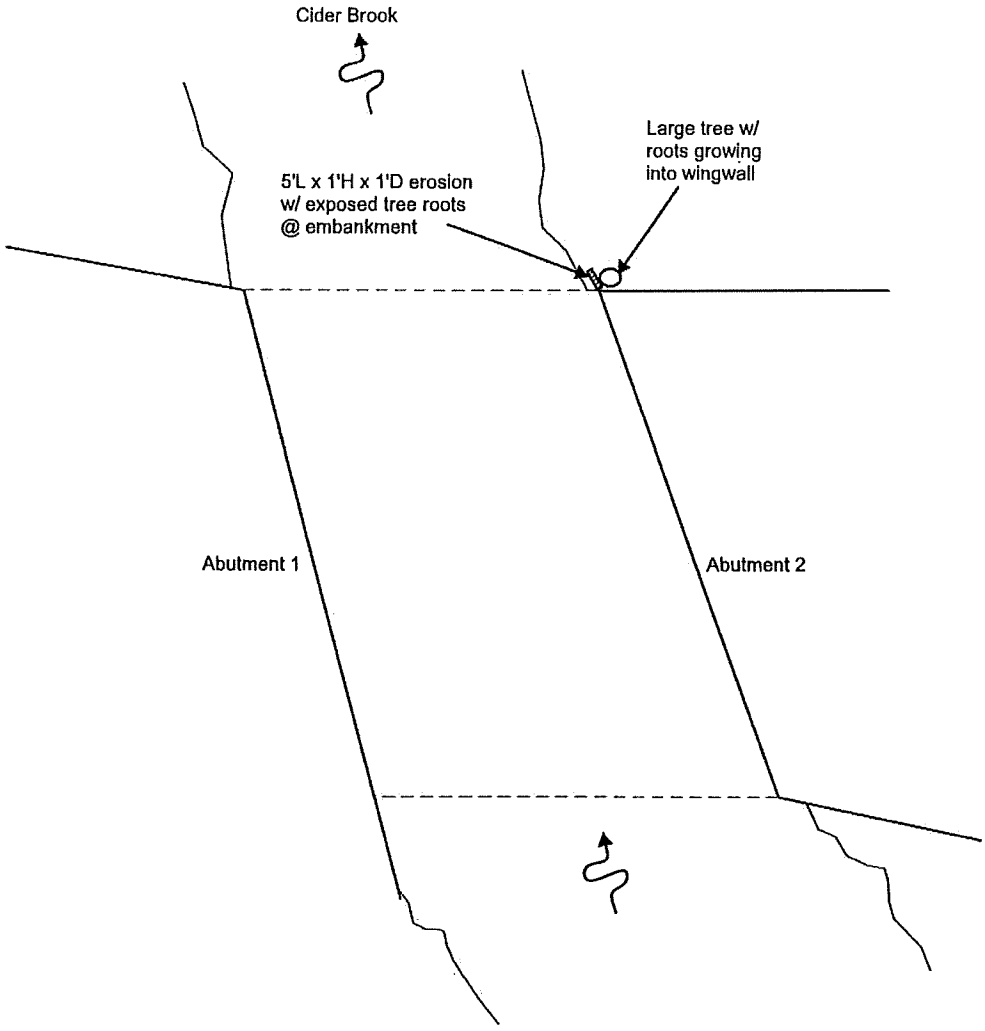

LEGEND:
- HOLLOW AREA
- SHALLOW REBAR
- SPALL AREA
- SPALL AREA WITH EXPOSED REBAR
- MAPCRACKS
- HAIRLINE CRACKS
- HONEYCOMB AREA
- SCALE AREA
- EFFLORESCENCE PRESENT

General Notes:
- Channel bottom consists of cobble stones up to 1.5'Ø.

CHANNEL DIAGRAM

REVISION 1	DATE:	CREW:	REVISION 3	DATE:	CREW:
REVISION 2	DATE:	CREW:	REVISION 4	DATE:	CREW:

AI Engineers, Inc.

DATE:	07/05/2018
JOB NO.:	2694

BRIDGE IDENTIFICATION:	004012
FEATURE CARRIED:	CIDER BROOK RD
FEATURE CROSSED:	CIDER BROOK
LOCATION:	AVON

004012

Photo # 1: Bridge identification number.

Photo # 2: West elevation (outlet) of bridge.

AI Engineers, Inc.		BRIDGE IDENTIFICATION:	004012
DATE:	07/05/2018	FEATURE CARRIED:	CIDER BROOK RD
JOB NO.:	2694	FEATURE CROSSED:	CIDER BROOK
		LOCATION:	AVON

Photo # 3: North approach from bridge. Note concrete block parapet at the northeast corner with blunt end.

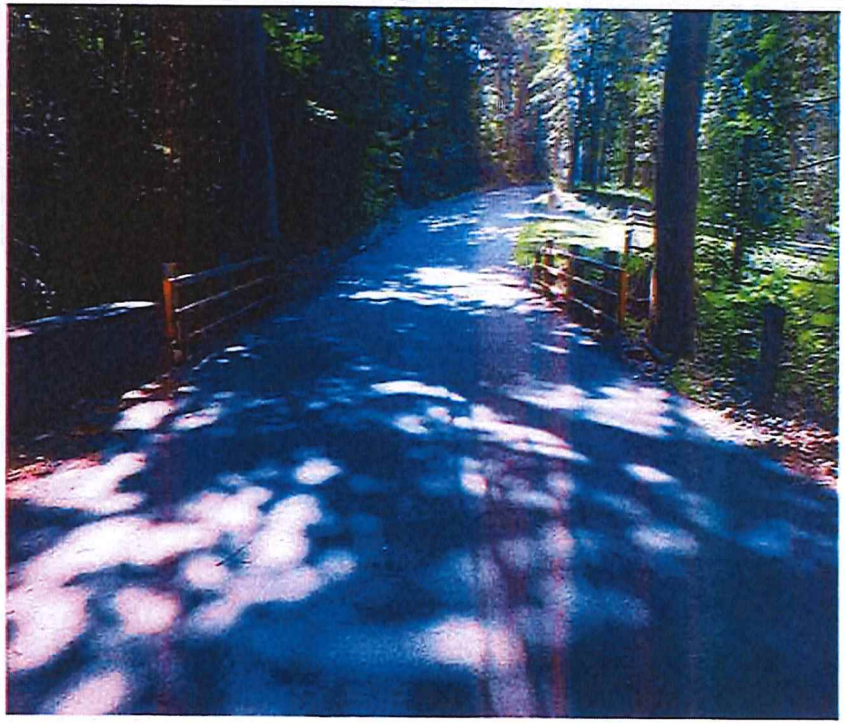

Photo # 4: Bridge from North approach.

AI Engineers, Inc.

DATE:	07/05/2018
JOB NO.:	2694

BRIDGE IDENTIFICATION:	004012
FEATURE CARRIED:	CIDER BROOK RD
FEATURE CROSSED:	CIDER BROOK
LOCATION:	AVON

Photo # 5: Typical bridge overlay.

Photo # 6: Underside of concrete deck (covered with corrugated metal forms) and steel framing (girder bottom flanges are visible only).

AI Engineers, Inc.			
DATE:	07/05/2018	BRIDGE IDENTIFICATION:	004012
		FEATURE CARRIED:	CIDER BROOK RD
JOB NO.:	2694	FEATURE CROSSED:	CIDER BROOK
		LOCATION:	AVON

Photo # 7: Bridge railing at the west side of the bridge. Note light rust and broken corner.

Photo # 8: Missing 2-cable guide rail at the northwest corner. Wooden posts are in place.

AI Engineers, Inc.		BRIDGE IDENTIFICATION:	004012
DATE:	07/05/2018	FEATURE CARRIED:	CIDER BROOK RD
JOB NO.:	2694	FEATURE CROSSED:	CIDER BROOK
		LOCATION:	AVON

Photo # 9: North approach pavement

Photo # 10: Girder G1 bottom flange with laminated rust and section loss.

AI Engineers, Inc.		BRIDGE IDENTIFICATION:	004012
DATE:	07/05/2018	FEATURE CARRIED:	CIDER BROOK RD
JOB NO.:	2694	FEATURE CROSSED:	CIDER BROOK
		LOCATION:	AVON

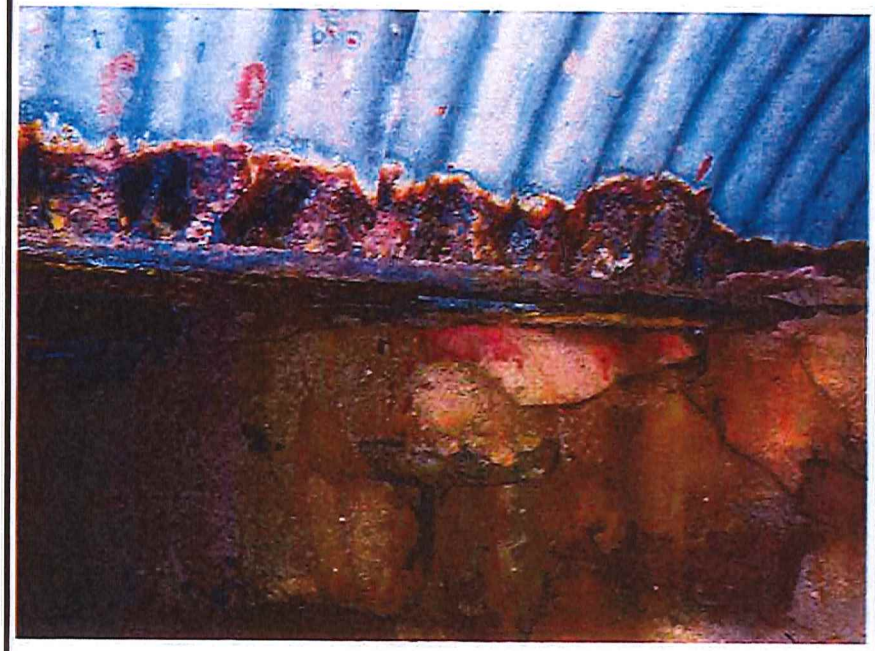

Photo # 11: Girder G3 bottom flange end at abutment 2 with laminated rust and section loss.

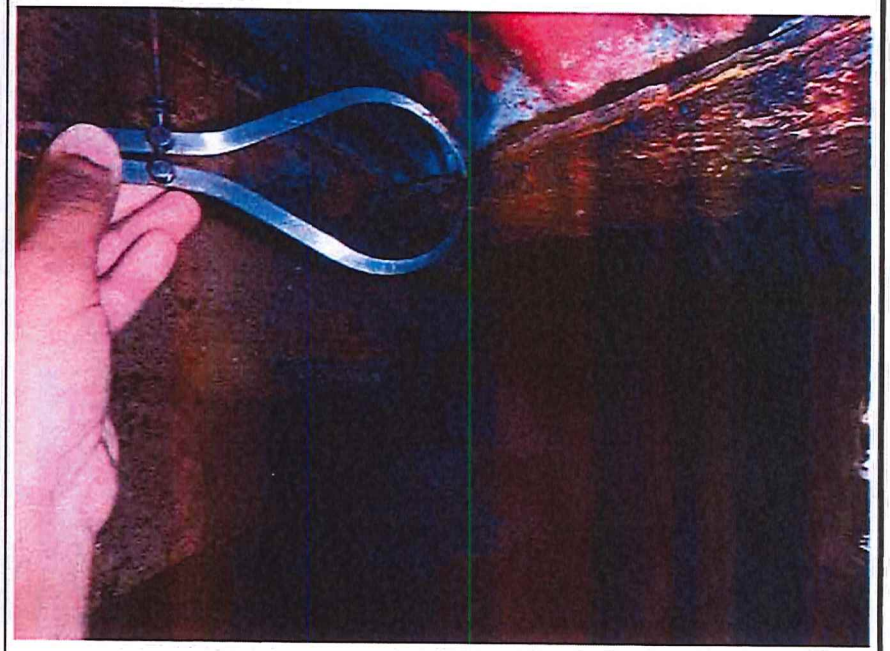

Photo # 12: Girder G3 bottom flange end at abutment 2 with laminated rust and section loss.

AI Engineers, Inc.		BRIDGE IDENTIFICATION:	004012
DATE:	07/05/2018	FEATURE CARRIED:	CIDER BROOK RD
JOB NO.:	2694	FEATURE CROSSED:	CIDER BROOK
		LOCATION:	AVON

Photo # 13: Girder G6 bottom flange with laminated rust and 100% section loss.

Photo # 14: Girder G6 bottom flange with laminated rust and section loss.

AI Engineers, Inc.		BRIDGE IDENTIFICATION:	004012
DATE:	07/05/2018	FEATURE CARRIED:	CIDER BROOK RD
JOB NO.:	2694	FEATURE CROSSED:	CIDER BROOK
		LOCATION:	AVON

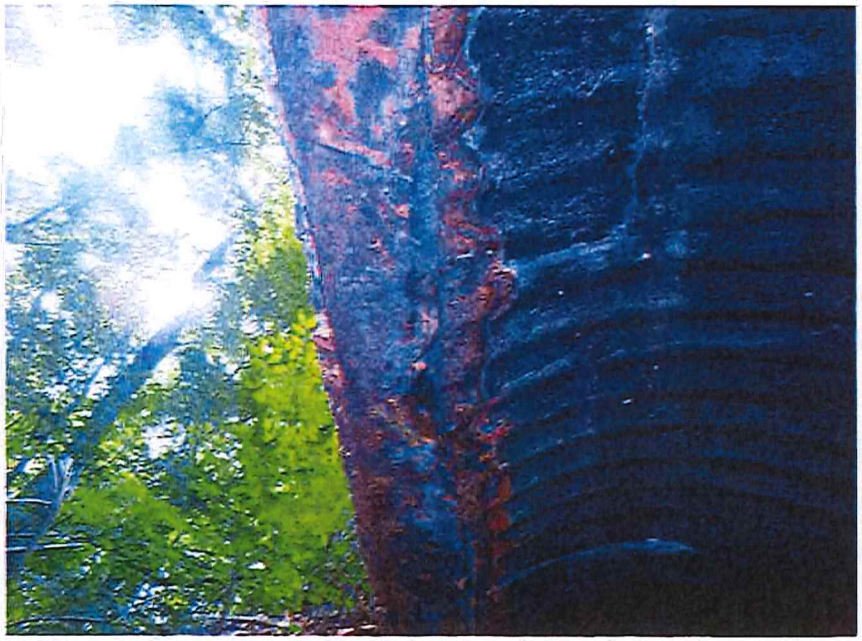

Photo # 15: Girder G7 bottom flange with laminated rust and 100% section loss.

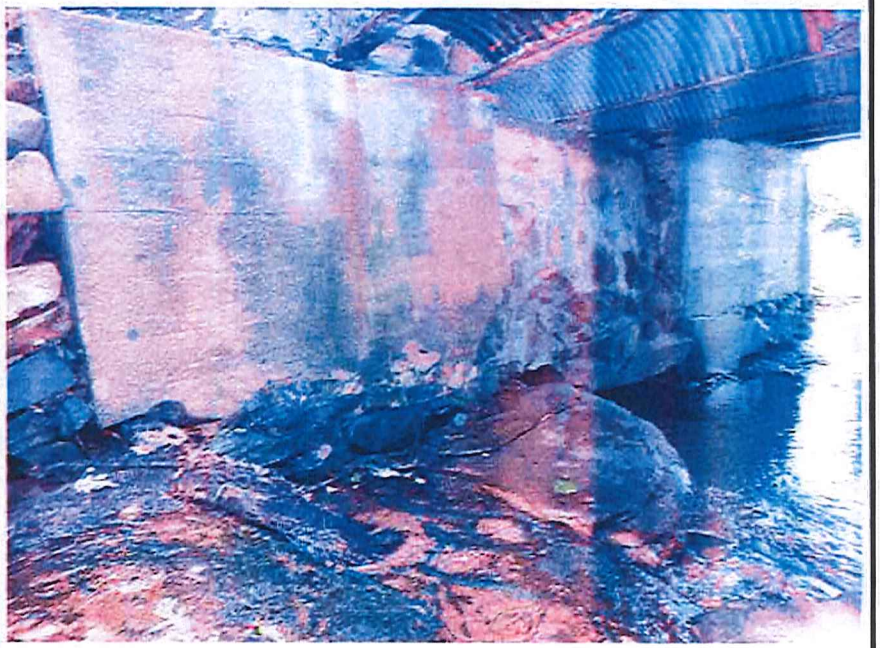

Photo # 16: Abutment 1 elevation. Note the ledge at the east end and voids/undermining at the bottom of the stem.

AI Engineers, Inc.		BRIDGE IDENTIFICATION:	004012
DATE:	07/05/2018	FEATURE CARRIED:	CIDER BROOK RD
JOB NO.:	2694	FEATURE CROSSED:	CIDER BROOK
		LOCATION:	AVON

Photo # 17: Abutment 2 elevation. Note voids/undermining at the bottom of the stem.

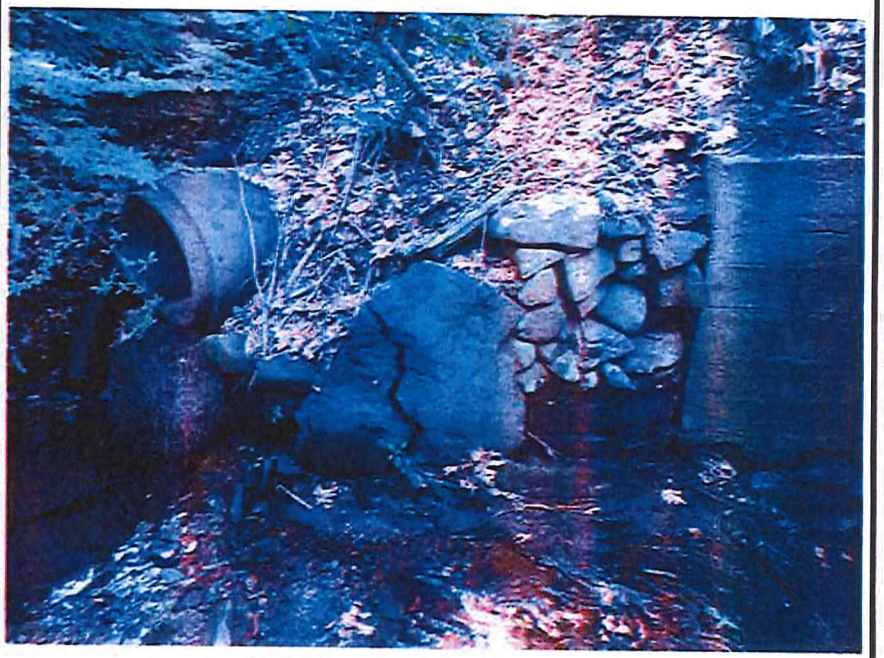

Photo # 18: Wingwall 1B with missing mortar and lose stones.

AI Engineers, Inc.			
DATE:	07/05/2018	BRIDGE IDENTIFICATION:	004012
		FEATURE CARRIED:	CIDER BROOK RD
JOB NO.:	2694	FEATURE CROSSED:	CIDER BROOK
		LOCATION:	AVON

Photo # 19: Wingwall 2A. Note the tree growing along the wingwall and erosion area at the embankment exposing the tree roots.

Photo # 20: Wingwall 1A has lose and missing stones at left top corner.

AI Engineers, Inc.			
DATE:	07/05/2018	BRIDGE IDENTIFICATION:	004012
		FEATURE CARRIED:	CIDER BROOK RD
JOB NO.:	2694	FEATURE CROSSED:	CIDER BROOK
		LOCATION:	AVON

Photo #21: Looking upstream (East).

Photo # 22: Looking downstream (West). Note flow drops-off and bends to the north with erosion on outside embankment.

AI ENGINEERS, INC.
BACK-UP FIELD NOTES

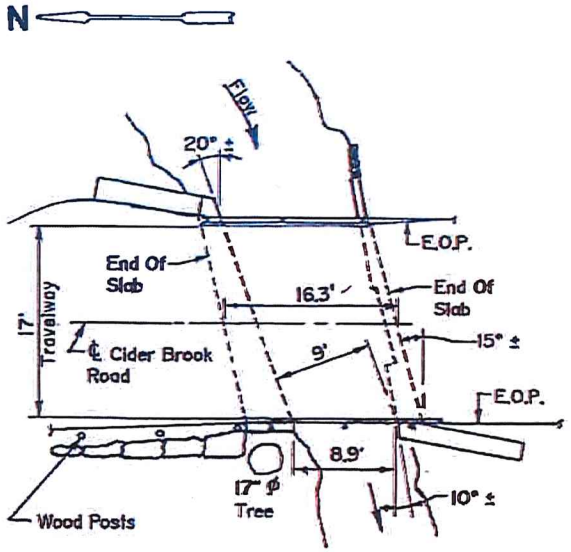

PLAN
SCALE: 1"= 10'- 0"

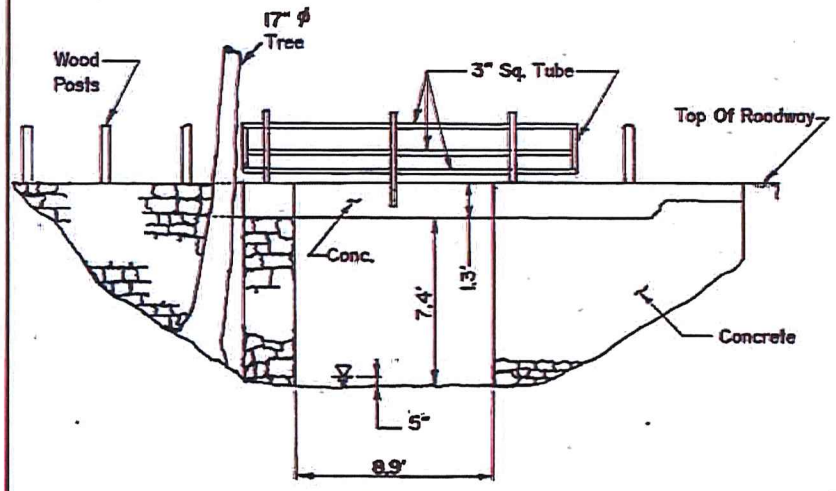

ELEVATION
SCALE: 1"= 5'- 0"

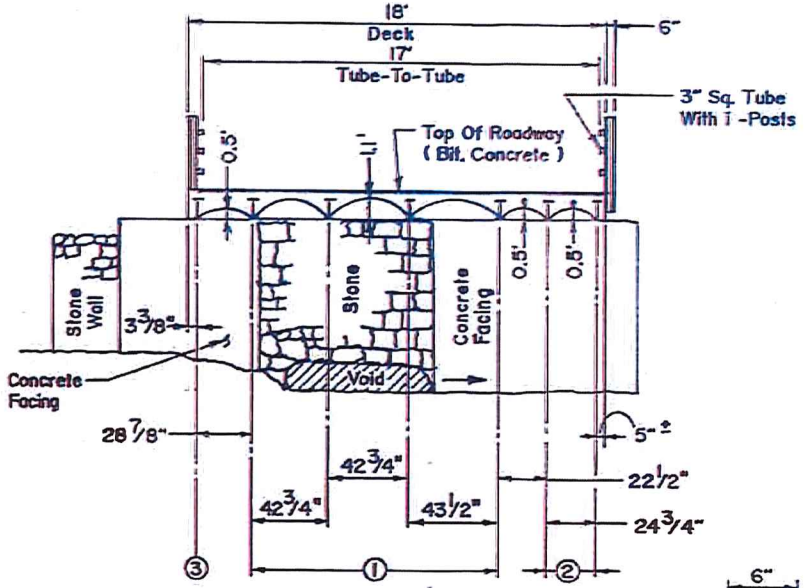

CROSS SECTION
LOOKING SOUTH
SCALE: 1"= 5'- 0"

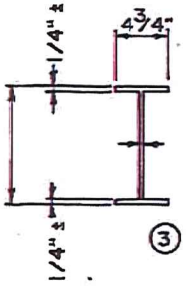

BEAM DETAIL
NOT TO SCALE

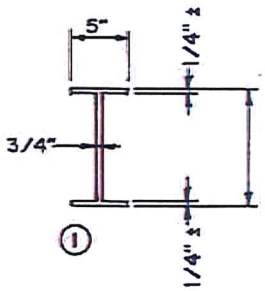

BEAM DETAIL
NOT TO SCALE

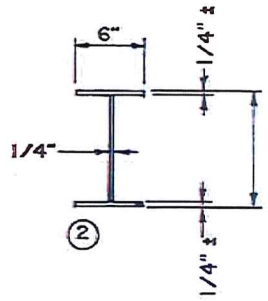

BEAM DETAIL
NOT TO SCALE

STATE OF CONNECTICUT DEPARTMENT OF TRANSPORTATION		
AVON CIDER BROOK ROAD OVER CIDER BROOK		
Steinman Boynton Gronquist & Birdsall 1000 Silas Deane Highway Rocky Hill, CT 06067		
SCALE: NOTED	DATE: 3/21/91	BR. NO. 004012